ZANEEN®

| | |
|---|---|
| PROJECT | |
| TYPE | |
| SPECIFIER | |
| QUANTITY | |
| DATE | |

# G-MINI ROUND HANGOVER SUSPENSION

**A300626-** _____ - _____ - _____ - _____ - _____ - _____ - _____ - _____

| base number | LED Dimming | Finishes (Diamond) | Finishes (Triangle) | Finishes (Circle) | Finish Options | Shine Ring | Beam Angle Options | Cable Options |
|---|---|---|---|---|---|---|---|---|

*1.To build a product code in our configurator select the specify button on the base model # product page*
*2. To build a manual product code on this datasheet choose from the options listed below in blue font and add the suffix to the base model #*

**GENERAL**

Series: G-Mini Round
Subseries: G-Mini Round Hangover
Partner: Prolicht
Division: Architectural
Installation: Suspension
Product Type: Clusters
Mounting Location: Ceiling
Light Distribution: Direct

**PHYSICAL**

Shape: Cylinder
Diameter (mm): 347
Diameter (in): 13 11/16
Height (mm): 150
Height (in): 5 7/8
Fixture Finish: SSR / BKV / CWI / CRY / HAB / UFT / ITA / RUA / FTG / MYG / LOD / PUS / FRO / FUP / KIA / POP / BLS / SPG / MEY / GOH / CHC / COM / ABZ / JAG / OBR / MOS / ROR
Accent Finish: NOF / COP / MIR / SSS
Fixture Material: Extruded Aluminum / Steel
Cable Details: 2000mm/78 3/4" / 4000mm/157 1/2" - Cable, Black, Green, Orange, Red, White

**ELECTRICAL**

Lamp Type: LED (Zhaga Standard)
Input Wattage (W): 26
Total Output Wattage (W): 23.7
Dimming: Tri-Mode (Non-Dimming and Phase Dimming (120Vac only) and 0-10V Dimming)
Driver Included: Yes
Driver Location: Integrated
Driver Type: Constant Current - Universal
Driver Class: Class 2
Input Voltage (V): 120 - 277

**LED**

Color Temperature (°K): 2700 / 3000 / 3500 / 4000
Max. Delivered Lumen (lm): 1614 / 1709 / 1804 / 1852
Nominal Lumen (lm): 1840 / 1949 / 2057 / 2112
CRI: >90 CRI
Lamp Life (hrs): 50000

**OPTICAL**

Beam Angle: 20 / 26 / 56

**RATINGS AND CERTIFICATIONS**

Certified By: Certified for North American Standards
IP rating: IP20

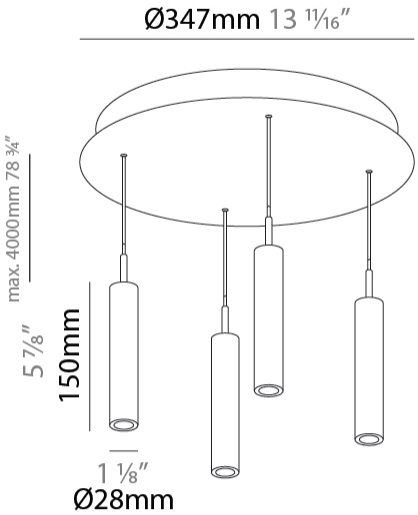


A



Zaneen Group Inc. © 2026, T 1800-388-3382, F 416-247-9319, www.zaneen.com
Available for International specifications by adding 'INT' at the end of the existing Model #. For assistance on 'custom' specifications, contact zteam@zaneen.com.
In a constant effort to supply the best product, we reserve the right to change specifications or materials without notice. The most recent specification sheets are found at zaneen.com

ZANEEN®

| | |
|---|---|
| PROJECT | |
| TYPE | |
| SPECIFIER | |
| QUANTITY | |
| DATE | |

# G-MINI ROUND HANGOVER SUSPENSION

A300626-

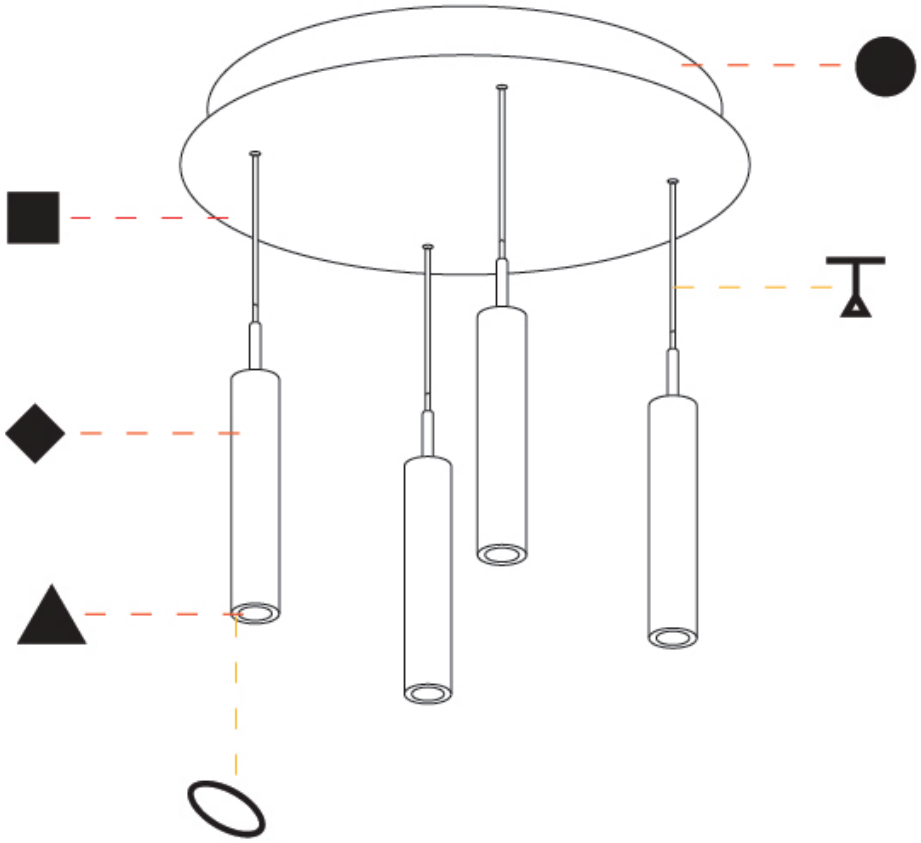

A



Zaneen Group Inc. © 2026, T 1800-388-3382, F 416-247-9319, www.zaneen.com

Available for International specifications by adding 'INT' at the end of the existing Model #. For assistance on 'custom' specifications, contact zteam@zaneen.com.
In a constant effort to supply the best product, we reserve the right to change specifications or materials without notice. The most recent specification sheets are found at zaneen.com

ZANEEN®

| | |
|---|---|
| PROJECT | |
| TYPE | |
| SPECIFIER | |
| QUANTITY | |
| DATE | |

# G-MINI ROUND HANGOVER SUSPENSION

**A300629-** _____ - _____ - _____ - _____ - _____ - _____ - _____ - _____

base number | LED Dimming | Finishes (Diamond) | Finishes (Triangle) | Finishes (Circle) | Finish Options | Shine Ring | Beam Angle Options | Cable Options

*1.To build a product code in our configurator select the specify button on the base model # product page*
*2. To build a manual product code on this datasheet choose from the options listed below in blue font and add the suffix to the base model #*

**GENERAL**

Series: G-Mini Round
Subseries: G-Mini Round Hangover
Partner: Prolicht
Division: Architectural
Installation: Suspension
Product Type: Clusters
Mounting Location: Ceiling
Light Distribution: Direct

**PHYSICAL**

Shape: Cylinder
Diameter (mm): 347
Diameter (in): 13 11/16
Height (mm): 150
Height (in): 5 7/8
Diffuser: Shine Ring - NOR / OPL / YEL / ORA / RED / BLU / GRN
Fixture Finish: SSR / BKV / CWI / CRY / HAB / UFT / ITA / RUA / FTG / MYG / LOD / PUS / FRO / FUP / KIA / POP / BLS / SPG / MEY / GOH / CHC / COM / ABZ / JAG / OBR / MOS / ROR
Accent Finish: NOF / COP / MIR / SSS
Fixture Material: Extruded Aluminum / Steel
Cable Details: 2000mm/78 3/4" / 4000mm/157 1/2" - Cable, Black, Green, Orange, Red, White

**ELECTRICAL**

Lamp Type: LED (Zhaga Standard)
Input Wattage (W): 26
Total Output Wattage (W): 23.7
Dimming: Non-Dimmable
Driver Included: Yes
Driver Location: Integrated
Driver Type: Constant Current - Universal
Driver Class: Class 2
Input Voltage (V): 120 - 277

**LED**

Color Temperature (°K): 2700 / 3000 / 3500 / 4000
Max. Delivered Lumen (lm): 1557 / 1421 / 1499 / 1450
Nominal Lumen (lm): 1840 / 1949 / 2057 / 2112
CRI: >90 CRI
Lamp Life (hrs): 50000

**OPTICAL**

Beam Angle: 32 / 58

**RATINGS AND CERTIFICATIONS**

Certified By: Certified for North American Standards
IP rating: IP20

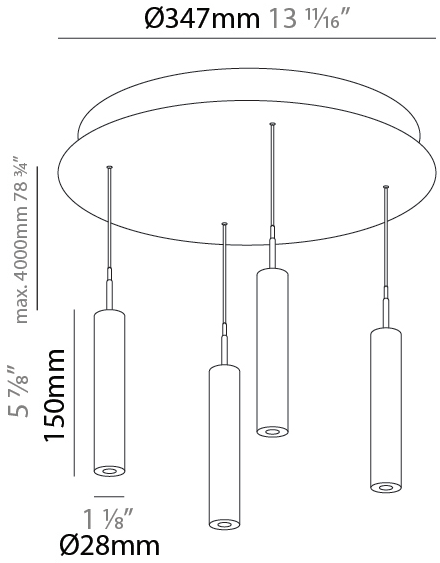


A



Zaneen Group Inc. © 2026, T 1800-388-3382, F 416-247-9319, www.zaneen.com
Available for International specifications by adding 'INT' at the end of the existing Model #. For assistance on 'custom' specifications, contact zteam@zaneen.com.
In a constant effort to supply the best product, we reserve the right to change specifications or materials without notice. The most recent specification sheets are found at zaneen.com

ZANEEN®

| | |
|---|---|
| PROJECT | |
| TYPE | |
| SPECIFIER | |
| QUANTITY | |
| DATE | |

# G-MINI ROUND HANGOVER SUSPENSION

A300629-

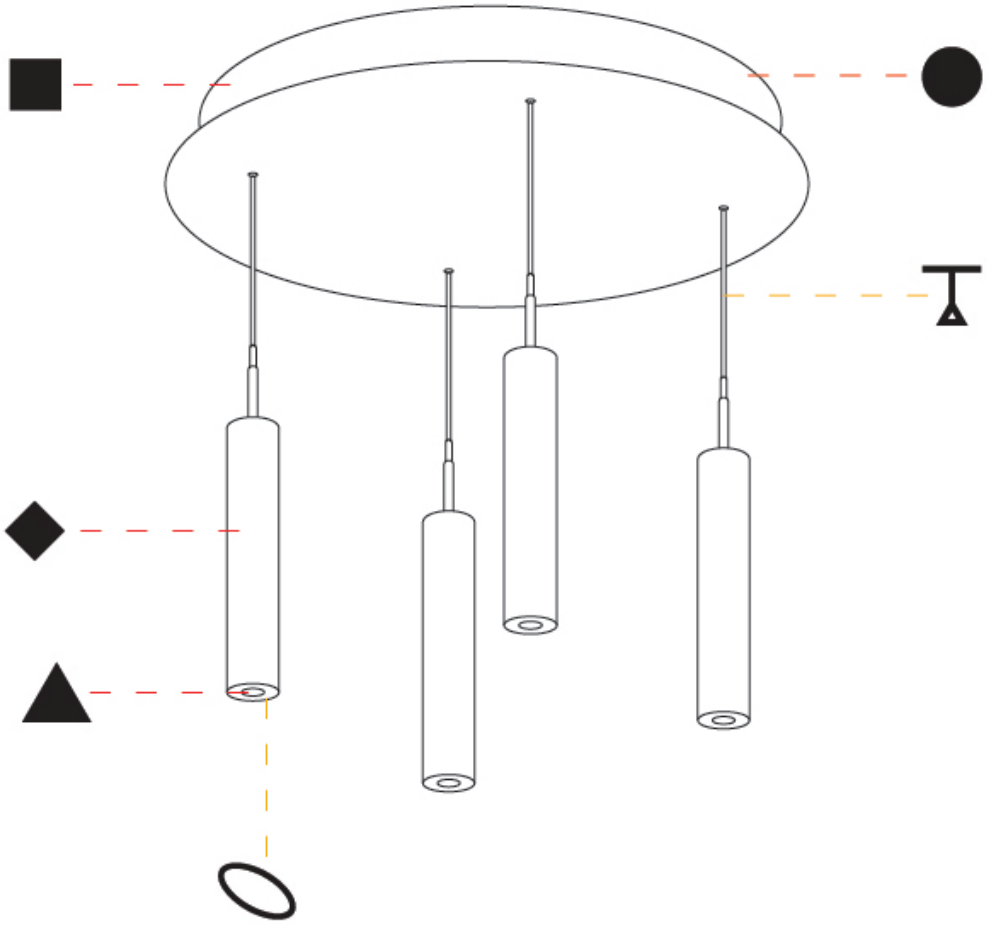

A



Zaneen Group Inc. © 2026, T 1800-388-3382, F 416-247-9319, www.zaneen.com

Available for International specifications by adding 'INT' at the end of the existing Model #. For assistance on 'custom' specifications, contact zteam@zaneen.com.
In a constant effort to supply the best product, we reserve the right to change specifications or materials without notice. The most recent specification sheets are found at zaneen.com

ZANEEN®

| | |
|---|---|
| PROJECT | |
| TYPE | |
| SPECIFIER | |
| QUANTITY | |
| DATE | |

# G-MINI ROUND HANGOVER SUSPENSION

**A300632-** _____ - _____ - _____ - _____ - _____ - _____ - _____ - _____

| base number | LED Dimming | Finishes (Diamond) | Finishes (Triangle) | Finishes (Circle) | Finish Options | Shine Ring | Beam Angle Options | Cable Options |
|---|---|---|---|---|---|---|---|---|

*1.To build a product code in our configurator select the specify button on the base model # product page*
*2. To build a manual product code on this datasheet choose from the options listed below in blue font and add the suffix to the base model #*

**GENERAL**

Series: G-Mini Round
Subseries: G-Mini Round Hangover
Partner: Prolicht
Division: Architectural
Installation: Suspension
Product Type: Clusters
Mounting Location: Ceiling
Light Distribution: Direct

**PHYSICAL**

Shape: Cylinder
Diameter (mm): 347
Diameter (in): 13 11/16
Height (mm): 150
Height (in): 5 7/8
Fixture Finish: SSR / BKV / CWI / CRY / HAB / UFT / ITA / RUA / FTG / MYG / LOD / PUS / FRO / FUP / KIA / POP / BLS / SPG / MEY / GOH / CHC / COM / ABZ / JAG / OBR / MOS / ROR
Accent Finish: NOF / COP / MIR / SSS
Fixture Material: Extruded Aluminum / Steel
Cable Details: 2000mm/78 3/4" / 4000mm/157 1/2" - Cable, Black, Green, Orange, Red, White

**ELECTRICAL**

Lamp Type: LED (Zhaga Standard)
Input Wattage (W): 39
Total Output Wattage (W): 35.4
Dimming: Non-Dimmable
Driver Included: Yes
Driver Location: Integrated
Driver Type: Constant Current - Universal
Driver Class: Class 2
Input Voltage (V): 120 - 277

**LED**

Color Temperature (°K): 2700 / 3000 / 3500 / 4000
Max. Delivered Lumen (lm): 2776 / 2904 / 3012 / 3080
Nominal Lumen (lm): 3878 / 4056 / 4206 / 4301
CRI: >90 CRI
Lamp Life (hrs): 50000

**OPTICAL**

Beam Angle: 40 / 52

**RATINGS AND CERTIFICATIONS**

Certified By: Certified for North American Standards
IP rating: IP20

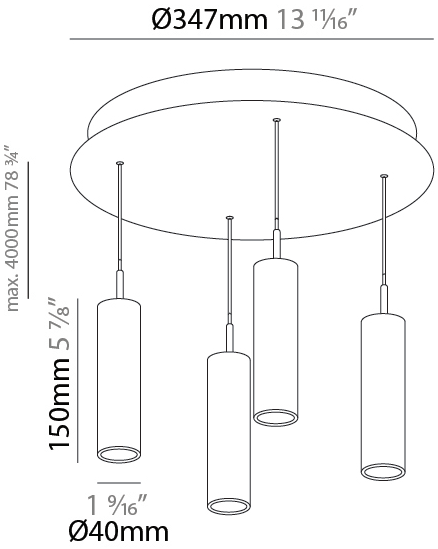


A



Zaneen Group Inc. © 2026, T 1800-388-3382, F 416-247-9319, www.zaneen.com
Available for International specifications by adding 'INT' at the end of the existing Model #. For assistance on 'custom' specifications, contact zteam@zaneen.com.
In a constant effort to supply the best product, we reserve the right to change specifications or materials without notice. The most recent specification sheets are found at zaneen.com

ZANEEN®

| | |
|---|---|
| PROJECT | |
| TYPE | |
| SPECIFIER | |
| QUANTITY | |
| DATE | |

# G-MINI ROUND HANGOVER SUSPENSION

A300632-

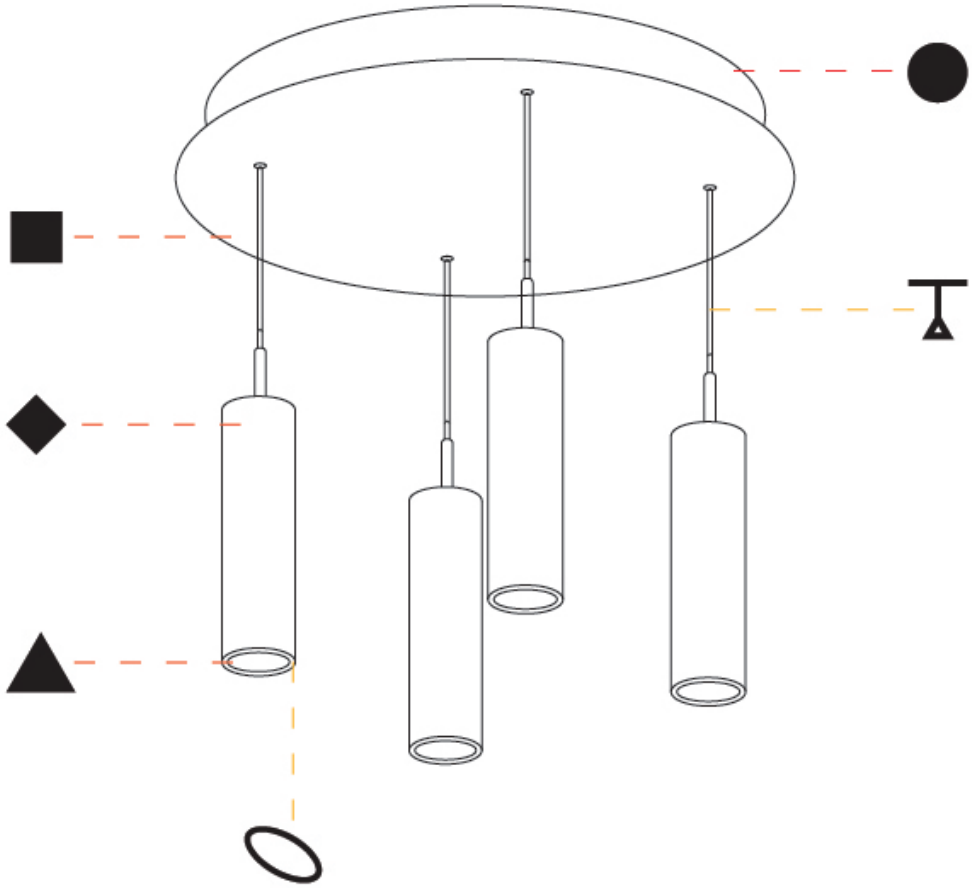

A



Zaneen Group Inc. © 2026, T 1800-388-3382, F 416-247-9319, www.zaneen.com

Available for International specifications by adding 'INT' at the end of the existing Model #. For assistance on 'custom' specifications, contact zteam@zaneen.com.
In a constant effort to supply the best product, we reserve the right to change specifications or materials without notice. The most recent specification sheets are found at zaneen.com

ZANEEN®

| | |
|---|---|
| PROJECT | |
| TYPE | |
| SPECIFIER | |
| QUANTITY | |
| DATE | |

# G-MINI ROUND HANGOVER SUSPENSION

**A300635-** _____ - _____ - _____ - _____ - _____ - _____ - _____ - _____

base number | LED Dimming | Finishes (Diamond) | Finishes (Triangle) | Finishes (Circle) | Finish Options | Shine Ring | Beam Angle Options | Cable Options

*1.To build a product code in our configurator select the specify button on the base model # product page*
*2. To build a manual product code on this datasheet choose from the options listed below in blue font and add the suffix to the base model #*

**GENERAL**

Series: G-Mini Round
Subseries: G-Mini Round Hangover
Partner: Prolicht
Division: Architectural
Installation: Suspension
Product Type: Clusters
Mounting Location: Ceiling
Light Distribution: Direct

**PHYSICAL**

Shape: Cylinder
Diameter (mm): 75
Diameter (in): 2 15/16
Length (mm): 1200
Length (in): 47 1/4
Height (mm): 150
Height (in): 5 7/8
Diffuser: Shine Ring - NOR / OPL / YEL / ORA / RED / BLU / GRN
Fixture Finish: SSR / BKV / CWI / CRY / HAB / UFT / ITA / RUA / FTG / MYG / LOD / PUS / FRO / FUP / KIA / POP / BLS / SPG / MEY / GOH / CHC / COM / ABZ / JAG / OBR / MOS / ROR
Accent Finish: NOF / COP / MIR / SSS
Fixture Material: Extruded Aluminum / Steel
Cable Details: 2000mm/78 3/4" / 4000mm/157 1/2" - Cable, Black, Green, Orange, Red, White

**ELECTRICAL**

Lamp Type: LED (Zhaga Standard)
Input Wattage (W): 26
Total Output Wattage (W): 23.7
Dimming: Non-Dimmable
Driver Included: Yes
Driver Location: Integrated
Driver Type: Constant Current - Universal
Driver Class: Class 2
Input Voltage (V): 120 - 277

**LED**

Color Temperature (°K): 2700 / 3000 / 3500 / 4000
Max. Delivered Lumen (lm): 1557 / 1649 / 1740 / 1787
Nominal Lumen (lm): 1840 / 1949 / 2057 / 2112
CRI: >90 CRI
Lamp Life (hrs): 50000

**OPTICAL**

Beam Angle: 6 / 22 / 38

**RATINGS AND CERTIFICATIONS**

Certified By: Certified for North American Standards
IP rating: IP20

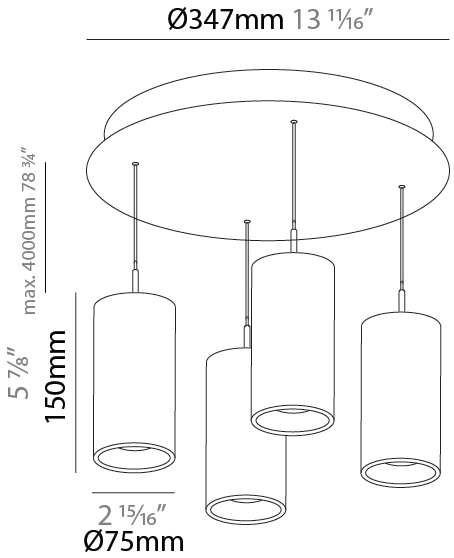


A



Zaneen Group Inc. © 2026, T 1800-388-3382, F 416-247-9319, www.zaneen.com
Available for International specifications by adding 'INT' at the end of the existing Model #. For assistance on 'custom' specifications, contact zteam@zaneen.com.
In a constant effort to supply the best product, we reserve the right to change specifications or materials without notice. The most recent specification sheets are found at zaneen.com

ZANEEN®

| | |
|---|---|
| PROJECT | |
| TYPE | |
| SPECIFIER | |
| QUANTITY | |
| DATE | |

# G-MINI ROUND HANGOVER SUSPENSION

A300635-

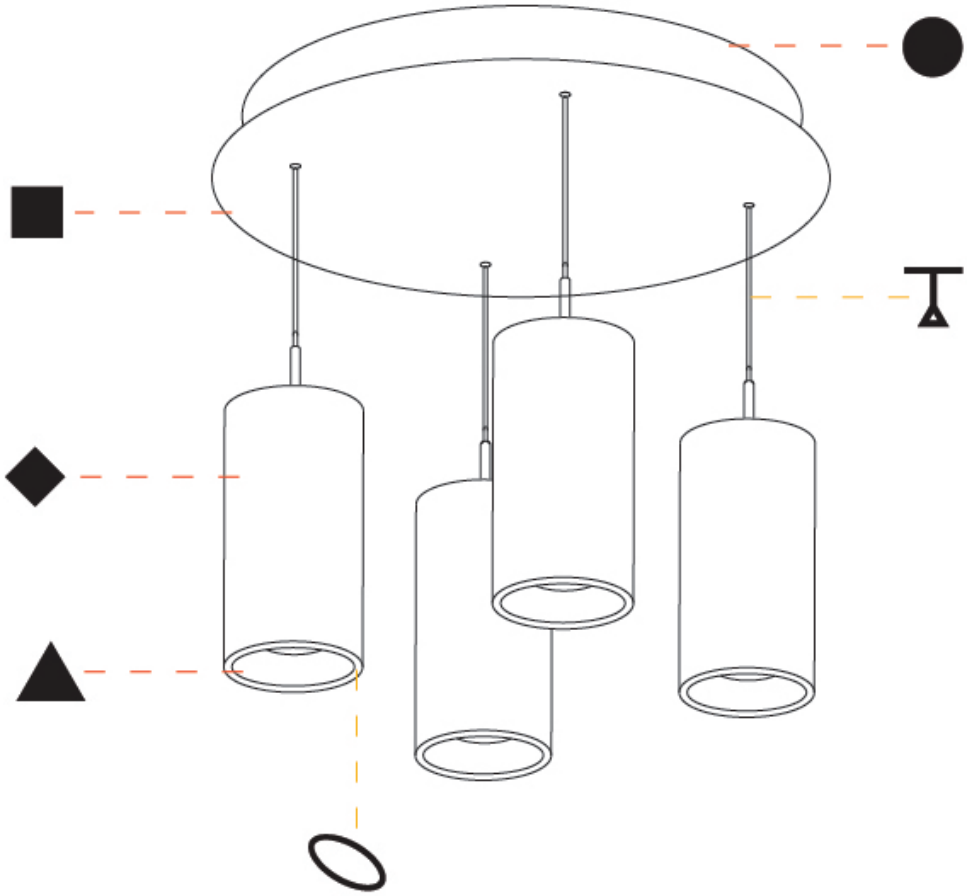

A



Zaneen Group Inc. © 2026, T 1800-388-3382, F 416-247-9319, www.zaneen.com

Available for International specifications by adding 'INT' at the end of the existing Model #. For assistance on 'custom' specifications, contact zteam@zaneen.com.
In a constant effort to supply the best product, we reserve the right to change specifications or materials without notice. The most recent specification sheets are found at zaneen.com

ZANEEN®

| | |
|---|---|
| PROJECT | |
| TYPE | |
| SPECIFIER | |
| QUANTITY | |
| DATE | |

# G-MINI ROUND HANGOVER SUSPENSION

**A300636-** _____ - _____ - _____ - _____ - _____ - _____ - _____ - _____

base number | LED Dimming | Finishes (Diamond) | Finishes (Triangle) | Finishes (Circle) | Finish Options | Shine Ring | Beam Angle Options | Cable Options

*1.To build a product code in our configurator select the specify button on the base model # product page*
*2. To build a manual product code on this datasheet choose from the options listed below in blue font and add the suffix to the base model #*

**GENERAL**

Series: G-Mini Round
Subseries: G-Mini Round Hangover
Partner: Prolicht
Division: Architectural
Installation: Suspension
Product Type: Clusters
Mounting Location: Ceiling
Light Distribution: Direct

**PHYSICAL**

Shape: Cylinder
Diameter (mm): 75
Diameter (in): 2 15/16
Length (mm): 1200
Length (in): 47 1/4
Height (mm): 150
Height (in): 5 7/8
Diffuser: Shine Ring - NOR / OPL / YEL / ORA / RED / BLU / GRN
Fixture Finish: SSR / BKV / CWI / CRY / HAB / UFT / ITA / RUA / FTG / MYG / LOD / PUS / FRO / FUP / KIA / POP / BLS / SPG / MEY / GOH / CHC / COM / ABZ / JAG / OBR / MOS / ROR
Accent Finish: NOF / COP / MIR / SSS
Fixture Material: Extruded Aluminum / Steel
Cable Details: 2000mm/78 3/4" / 4000mm/157 1/2" - Cable, Black, Green, Orange, Red, White

**ELECTRICAL**

Lamp Type: LED (Zhaga Standard)
Input Wattage (W): 38
Total Output Wattage (W): 34.5
Dimming: Non-Dimmable
Driver Included: Yes
Driver Location: Integrated
Driver Type: Constant Current - Universal
Driver Class: Class 2
Input Voltage (V): 120 - 277

**LED**

Color Temperature (°K): 2700 / 3000 / 3500 / 4000
Max. Delivered Lumen (lm): Max 3171
Nominal Lumen (lm): Max 4231
CRI: >90 CRI
Lamp Life (hrs): 50000

**OPTICAL**

Beam Angle: 6 / 22 / 38

**RATINGS AND CERTIFICATIONS**

Certified By: Certified for North American Standards
IP rating: IP20

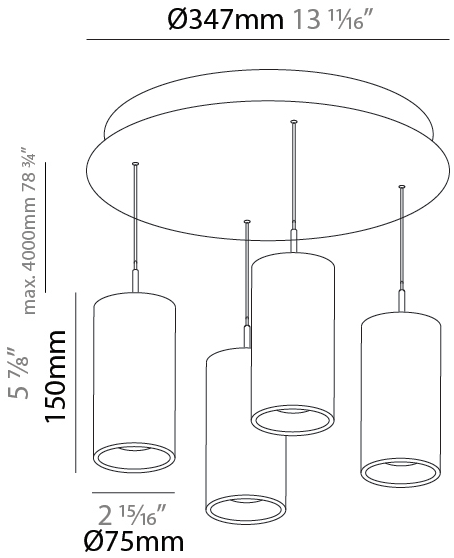


A



Zaneen Group Inc. © 2026, T 1800-388-3382, F 416-247-9319, www.zaneen.com
Available for International specifications by adding 'INT' at the end of the existing Model #. For assistance on 'custom' specifications, contact zteam@zaneen.com.
In a constant effort to supply the best product, we reserve the right to change specifications or materials without notice. The most recent specification sheets are found at zaneen.com

ZANEEN®

| | |
|---|---|
| PROJECT | |
| TYPE | |
| SPECIFIER | |
| QUANTITY | |
| DATE | |

# G-MINI ROUND HANGOVER SUSPENSION

A300636-

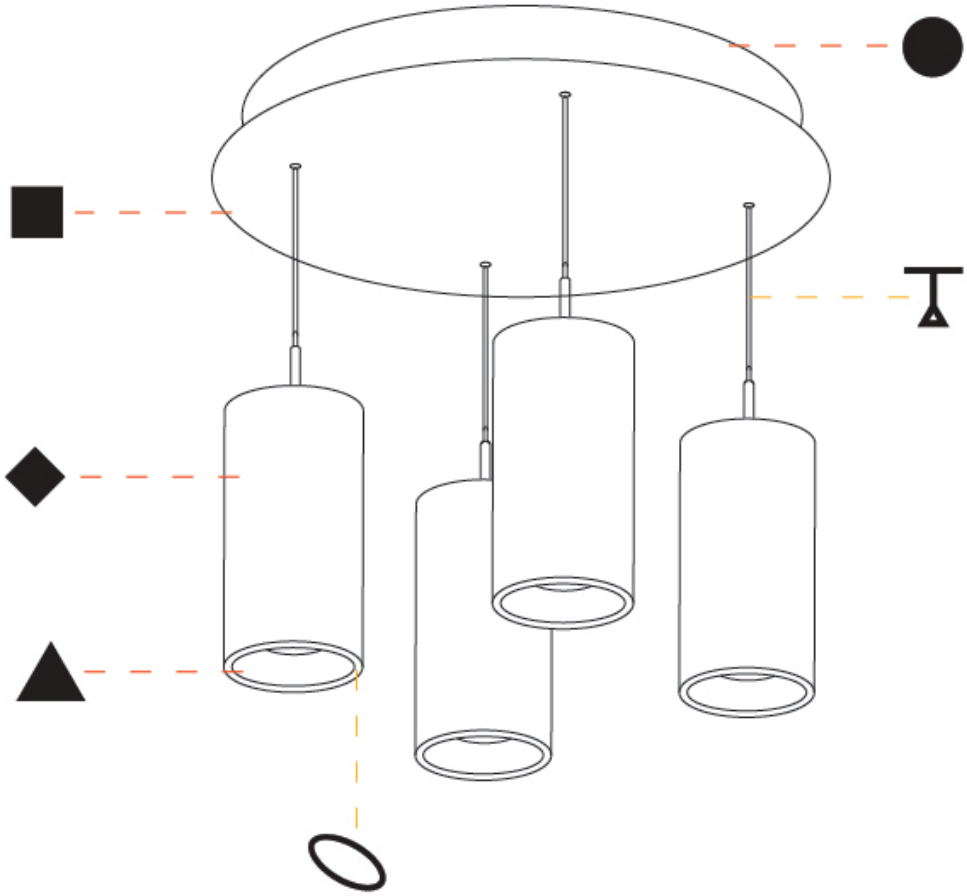

A



Zaneen Group Inc. © 2026, T 1800-388-3382, F 416-247-9319, www.zaneen.com

Available for International specifications by adding 'INT' at the end of the existing Model #. For assistance on 'custom' specifications, contact zteam@zaneen.com.
In a constant effort to supply the best product, we reserve the right to change specifications or materials without notice. The most recent specification sheets are found at zaneen.com

ZANEEN®

# G-MINI ROUND

## COLOR FINISH CHART

| | |
|---|---|
| PROJECT | |
| TYPE | |
| SPECIFIER | |
| QUANTITY | |
| DATE | |

**Fixture Finish**

Sparkling Silver - 01 (SSR)

Black Velvet - 02 (BKV)

Crystal White - 03 (CWI)

Creamy - 04 (CRY)

Hampton Bay - 05 (HAB)

Urban Forest - 07 (UFT)

In the Army - 08 (ITA)

Rusty Angel - 09 (RUA)

Fade to Gray - 12 (FTG)

Mysterious Gray - 13 (MYG)

Lost Dream - 15 (LOD)

Purple Sky - 16 (PUS)

Fresh Oh - 17 (FRO)

Funky P. - 18 (FUP)

Kissing Aphrodite - 19 (KIA)

Poseidon's Paradise - 20 (POP)

Blue Sky - 21 (BLS)

Spring Green - 22 (SPG)

Mellow Yellow - 23 (MEY)

Golden Heart - 24 (GOH)

Champagne Cream - 26 (CHC)

Copper Mine - 27 (COM)

Ancient Bronze - 28 (ABZ)

Jazz Gold - 29 (JAG)

Olive Breeze - 30 (OBR)

Moonlight Silver - 31 (MOS)

Rosewood Red - 32 (ROR)

A



Zaneen Group Inc. © 2026, T 1800-388-3382, F 416-247-9319, www.zaneen.com

Available for International specifications by adding 'INT' at the end of the existing Model #. For assistance on 'custom' specifications, contact zteam@zaneen.com.
In a constant effort to supply the best product, we reserve the right to change specifications or materials without notice. The most recent specification sheets are found at zaneen.com

ZANEEN®

# G-MINI ROUND HANGOVER SUSPENSION

COLOR FINISH CHART

| | |
|---|---|
| PROJECT | |
| TYPE | |
| SPECIFIER | |
| QUANTITY | |
| DATE | |

**Accent Finish**

Copper - 51 (COP)

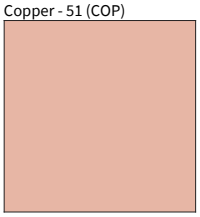

Mirror - 53 (MIR)

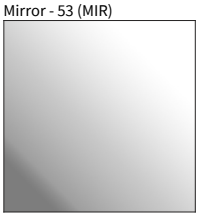

**Digital:** Not all screens are calibrated the same, and therefore, colors will appear differently between screens.
**Physical:** When texture is involved, there will be variations in color, character and tone within a product series and between product families.
**Champagne Cream, Copper Mine, Ancient Bronze + Jazz Gold:** These finishes have slight fading from specific powder coating production. Each luminaire will slightly vary.

A



Zaneen Group Inc. © 2026, T 1800-388-3382, F 416-247-9319, www.zaneen.com

Available for International specifications by adding 'INT' at the end of the existing Model #. For assistance on 'custom' specifications, contact zteam@zaneen.com.
In a constant effort to supply the best product, we reserve the right to change specifications or materials without notice. The most recent specification sheets are found at zaneen.com

ZANEEN®

# G-MINI ROUND

| | |
|---|---|
| PROJECT | |
| TYPE | |
| SPECIFIER | |
| QUANTITY | |
| DATE | |

## LEGEND

| | | | | | |
|---|---|---|---|---|---|
| | floor-mounted | | pivotable | | special LED (upon request) RGB, RGBW, tunable, gold+, meat+, art+, fashion+ |
| | wall and ceiling: recessed and surface mounted | | rotating | | warm dim / natural dimming LED |
| | ceiling-mounted and wall-mounted | | illuminate tilted | | rechargeable battery powered |
| | wall-mounted | | color of suspension cable | | fixture with natural vivid LED (upon request) |
| | omni-directional light distribution | | length of suspension cable | CRI | color rendering index |
| | direct light distribution | | reflector degree selection | °K | color temperature |
| | direct/indirect light distribution | | super spot | LM | lumen (luminous flux) |
| | indirect light distribution | | lens | LM/W | efficacy (lumens per watt) |
| | asymmetric light distribution | | lens pack | UGR | Unified Glare Rating (UGR) range from 5-40 |
| | aura light distribution | | shine ring | 316 | marine grade (AISI 316 stainless steel) |
| | round wall or ceiling cut-out | | integrated shine ring with diffuser | | walk on |
| | square wall or ceiling cut-out | | free individual colors 01-29 | | drive on |
| | the supplied jig specifies the cutout dimensions | | individual colors: 00 (free of charge), 01-25 (extra charge) | DSC | Dark Sky Compliance |
| | minimum distance (meters) lamp - object | | luminaire part to be colored (F1) | | Americans with Disabilities Act (less than 4" off the wall located between 27"-84" from floor) |
| | recessed depth | | luminaire part to be colored (F2) | | lamp protected against explosion |
| | ceiling thickness in mm | | luminaire part to be colored (F3) | | blown glass using traditional methods by master glass blower |
| | ceiling thickness selection | | luminaire part to be colored (F4) | | acoustic material |
| | dimmable DP (phase), DV (0-10V), DD (dali), DS (step-dim) | | luminaire part to be colored (F5) | | protection class I, protection insulation |
| | included or excluded LED driver/transformer/ control gear | | color of 3-circuit adaptor | | protection class II, protection insulation |
| | separately switchable | | indirect diffuser | | ETL Certified to UL and CSA Standards |
| | sensor | D | direct diffuser | | UL Certified to UL and CSA Standards |
| | remote control | | ball-proof (upon request) | | CSA Certified to UL and CSA Standards |
| | available upon request | | accessory | | Certified for North American Standards |

## IP RATING

| | |
|---|---|
| IP20 | protected against ingress of solid bodies greater than 12.5mm (finger) |
| IP33 | protected against ingress of solid bodies greater than 2.5mm<br>protected against sprays of water up to 60 degrees from the vertical (rain) |
| IP40 | protected against ingress of solid bodies greater than 1mm (wire)<br>no protection against the ingress of moisture |
| IP43 | protected against ingress of solid bodies greater than 1mm (wire)<br>protected against sprays of water up to 60 degrees from the vertical (rain) |
| IP44 | protected against ingress of solid bodies greater than 1mm (wire)<br>protected against water splashed from all directions |
| IP54 | protected against limited ingress of dust (wet rooms/covered outdoor areas)<br>protected against water splashed from all directions |
| IP65 | protected against ingress of dust<br>protected against jets of water |
| IP66 | protected against ingress of dust<br>protected against powerful jets of water or heavy seas |
| IP67 | protected against ingress of dust<br>protected against immersion of water between 15cm - 1m for 30 minutes |
| IP68 | protected against ingress of dust<br>protected against immersion of water under pressure for long periods |

## IK RATING

| | |
|---|---|
| IK01 | protected against 0.14 joules impact (equivalent to 0.25kg mass dropped from 56mm above the surface) |
| IK02 | protected against 0.2 joules impact (equivalent to 0.25kg mass dropped from 80mm above the surface) |
| IK03 | protected against 0.35 joules impact (equivalent to 0.25kg mass dropped from 140mm above the surface) |
| IK04 | protected against 0.5 joules impact (equivalent to 0.25kg mass dropped from 200mm above the surface) |
| IK05 | protected against 0.7 joules impact (equivalent to 0.25kg mass dropped from 280mm above the surface) |
| IK06 | protected against 1 joules impact (equivalent to 0.25kg mass dropped from 400mm above the surface) |
| IK07 | protected against 2 joules impact (equivalent to 0.5kg mass dropped from 400mm above the surface) |
| IK08 | protected against 5 joules impact (equivalent to 1.7kg mass dropped from 300mm above the surface) |
| IK09 | protected against 10 joules impact (equivalent to 5.0kg mass dropped from 200mm above the surface) |
| IK10 | protected against 20 joules impact (equivalent to 5.0kg mass dropped from 400mm above the surface) |